NORTON'S THEOREM

CIRCUIT ANALYSIS METHOD

prepared by:

Gyro A. Madrona

Electronics Engineer

GRADING SYSTEM

FINAL GRADE

30%

PRELIM

30%

MIDTERM

40%

ENDTERM

TERM GRADE

50%

WEEKLY

50%

EXAM

100%

LABORATORY

PENALTY

0

ABSENT

3

45-min LATE

7 max

15-min LATE

TOPIC OUTLINE

Norton's Theorem

Norton's Equivalent Circuit

- Norton's Current
- Norton's Resistance

NORTON'S THEOREM

It is possible to simplify any **linear** circuit, irrespective of how complex it is, to an equivalent circuit with a single current source, $\boldsymbol{I_N}$ and a parallel resistance, $\boldsymbol{R_N}$

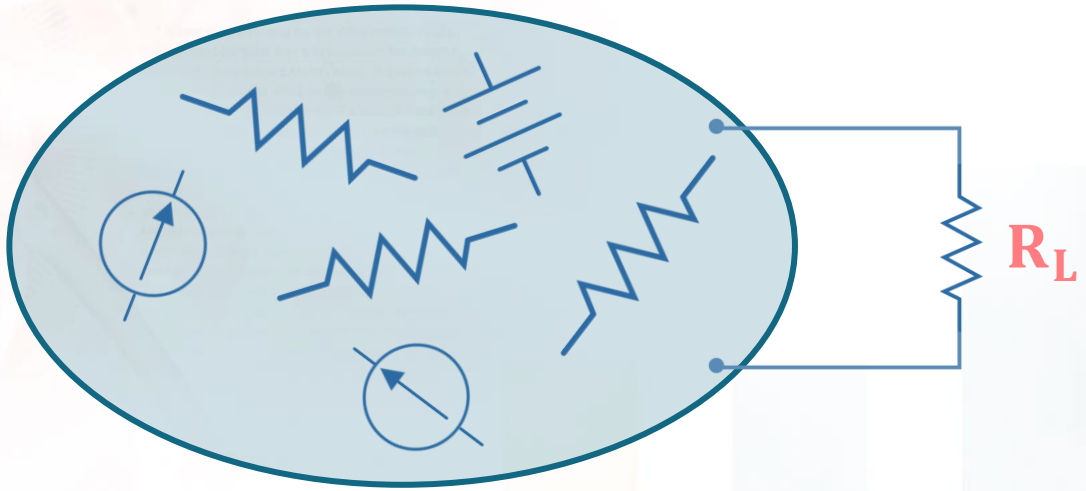

NORTON'S EQUIVALENT

It is possible to simplify any **linear** circuit, irrespective of how complex it is, to an equivalent circuit with a single current source, I_N and a parallel resistance, R_N

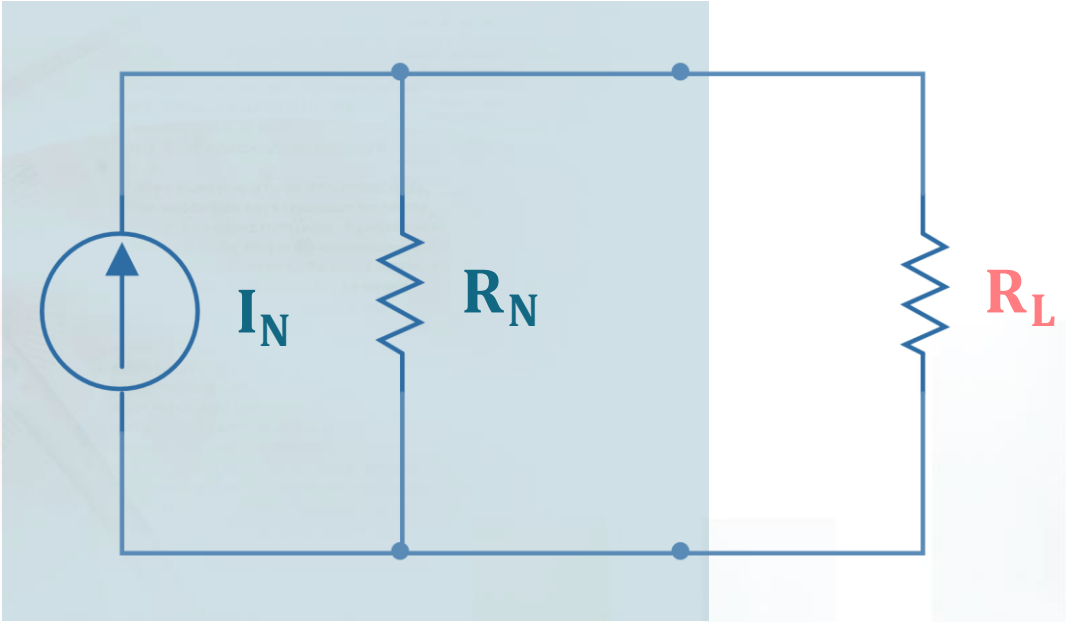

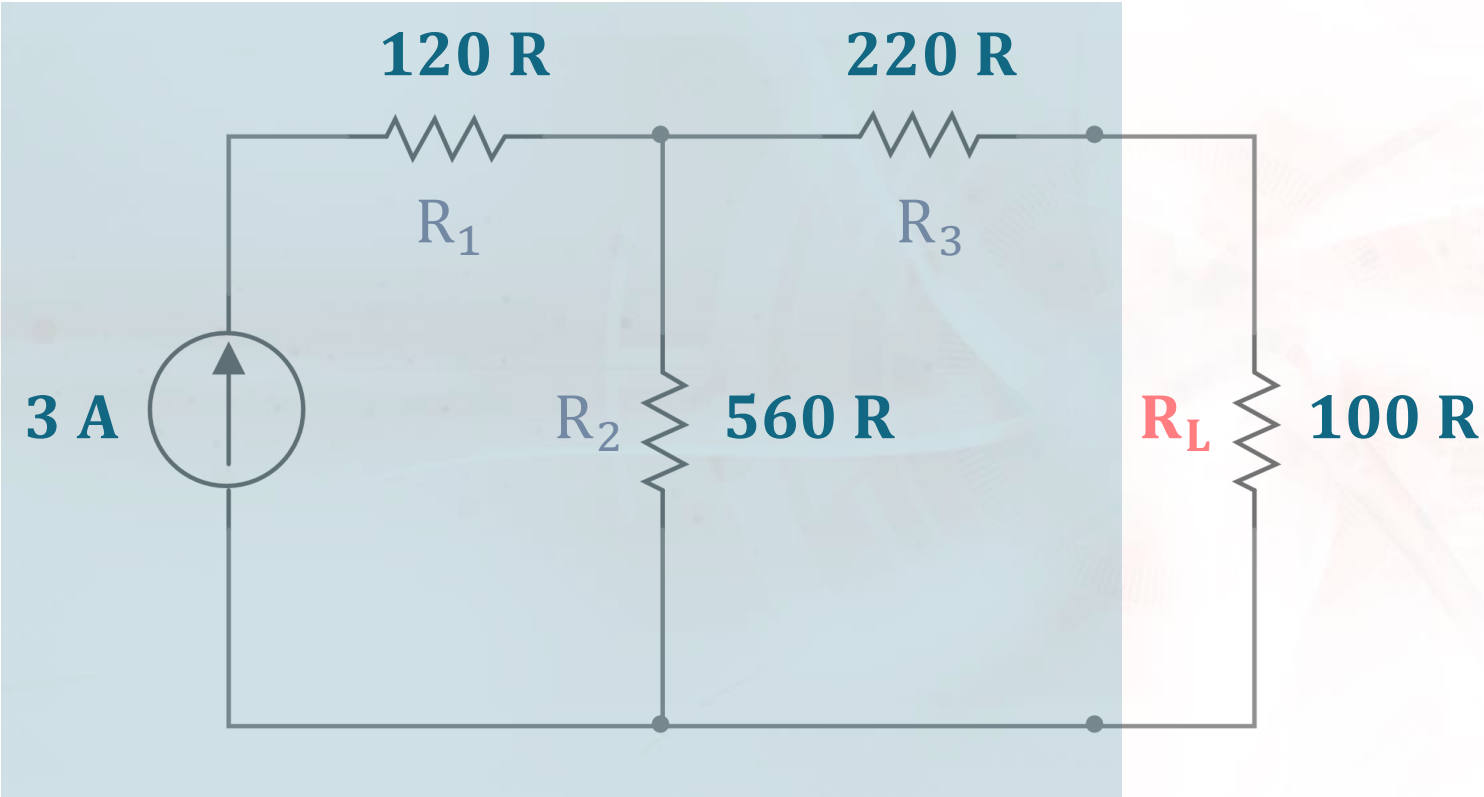
120 R
220 R
R1
R3
3 A
R2
560 R
RL
100 R

NORTON'S CURRENT, I_N

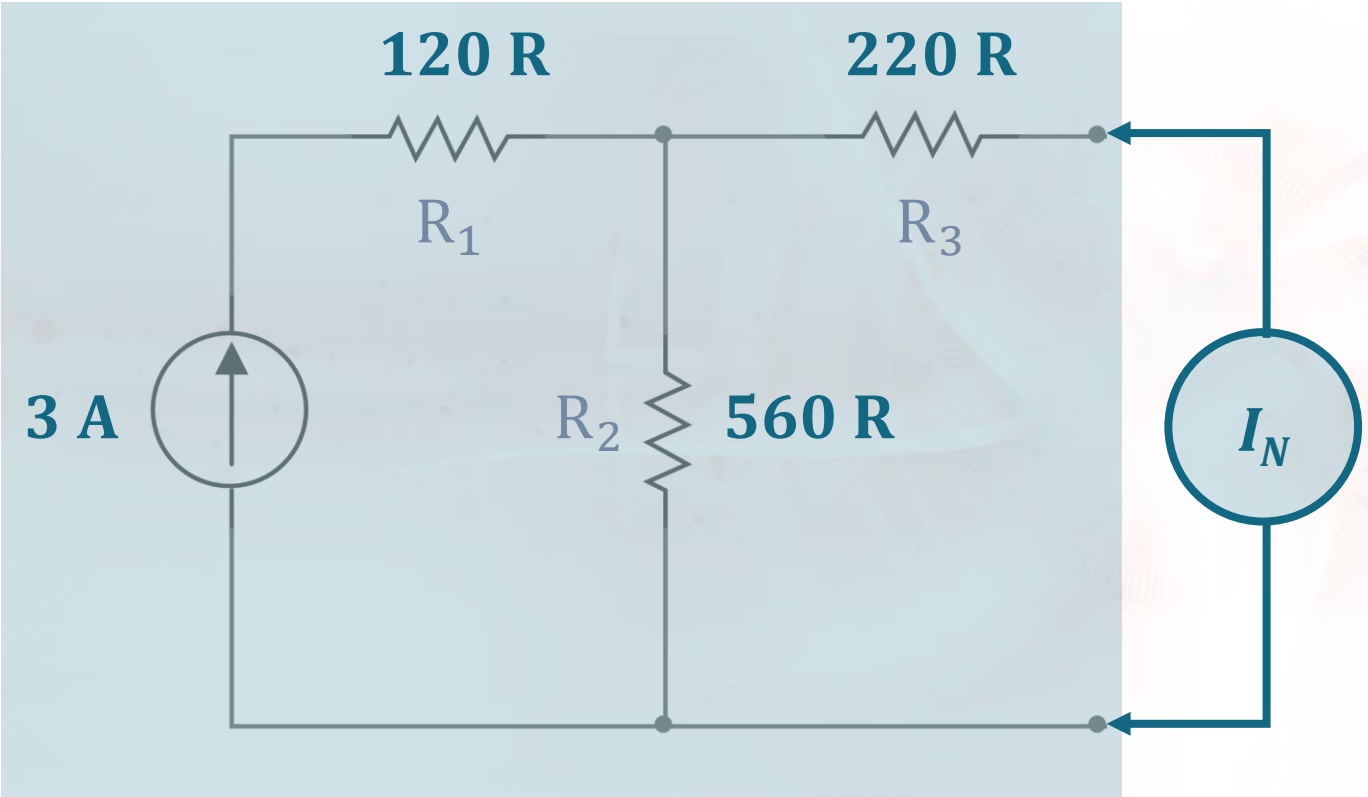

NORTON'S RESISTANCE, R_N

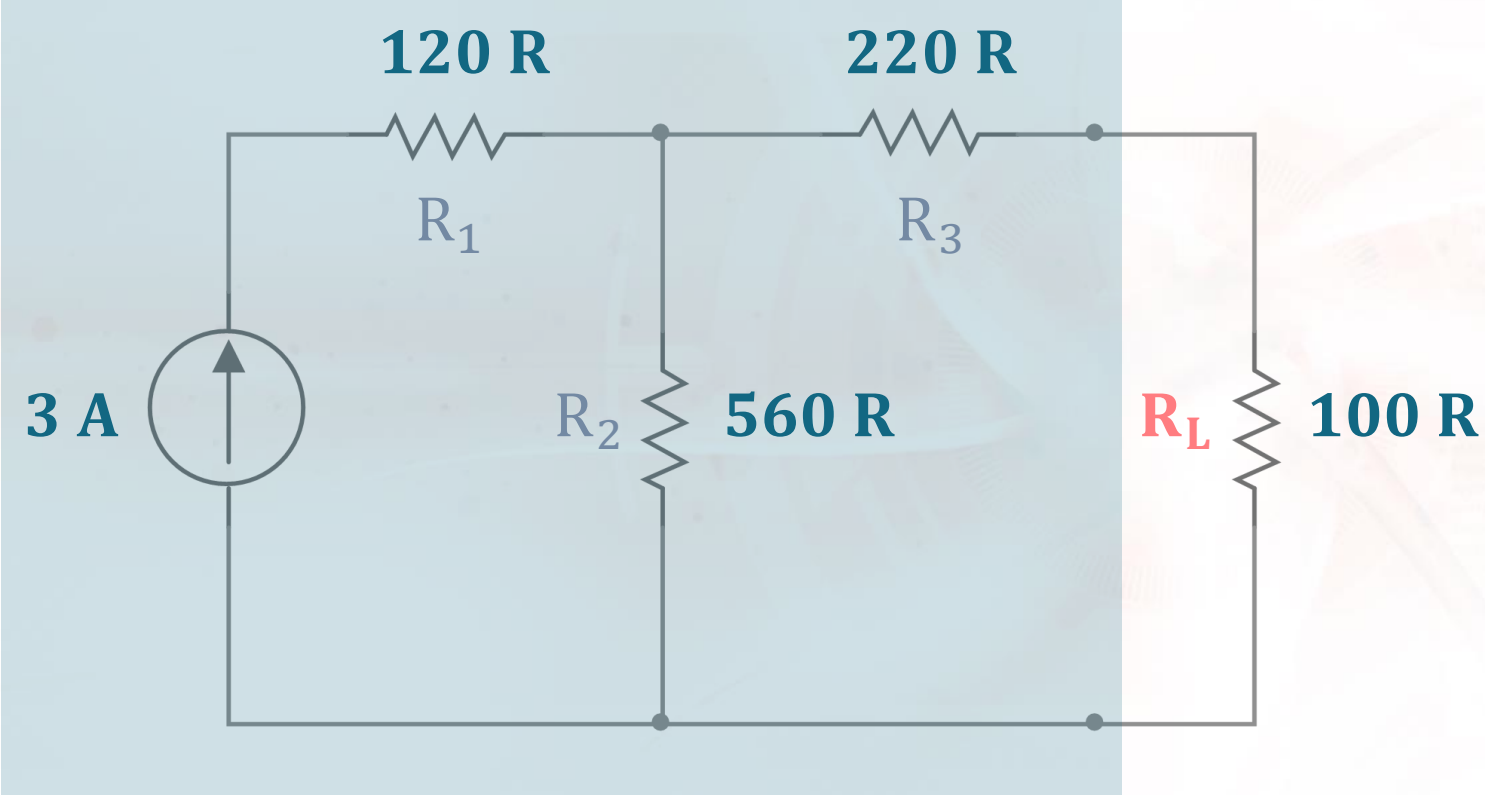

NORTON'S RESISTANCE, R_N

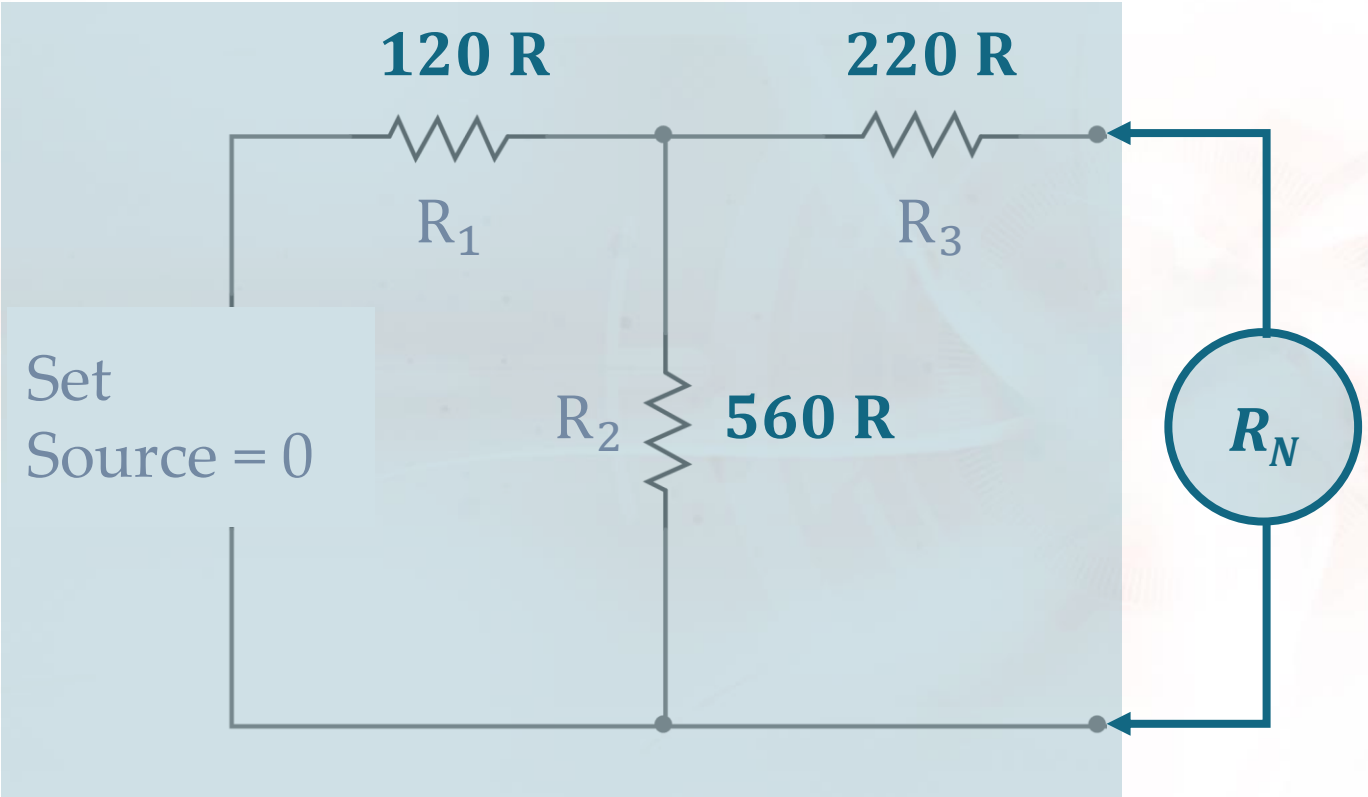

NORTON'S EQUIVALENT NETWORK

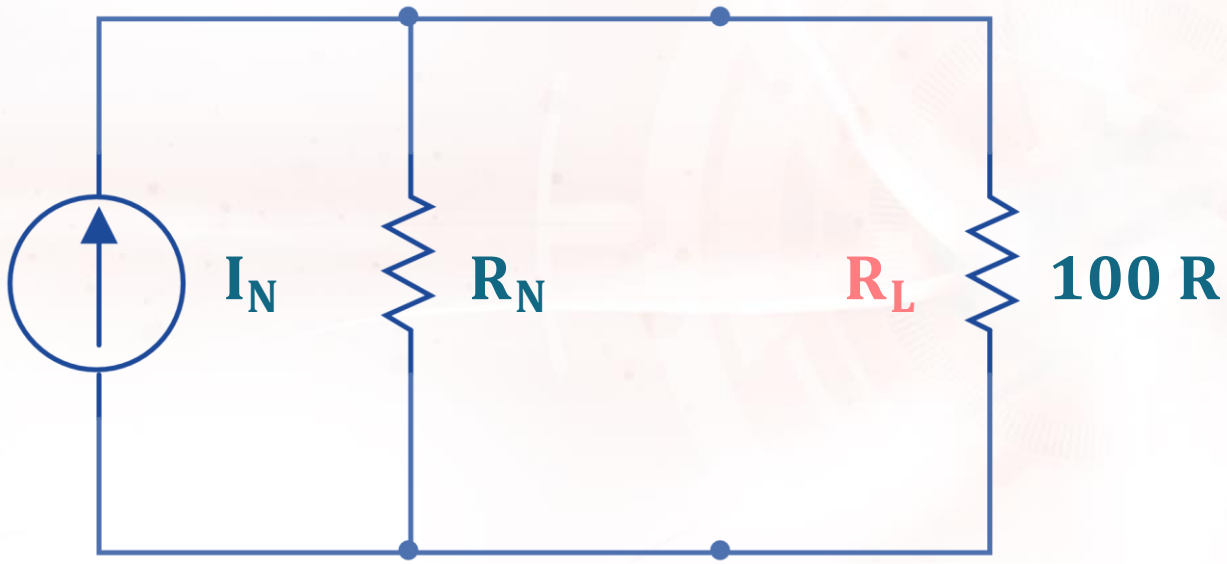

Determine the **current**, **power**, and **voltage** across the **load resistor**, R_L using **Norton's** method.

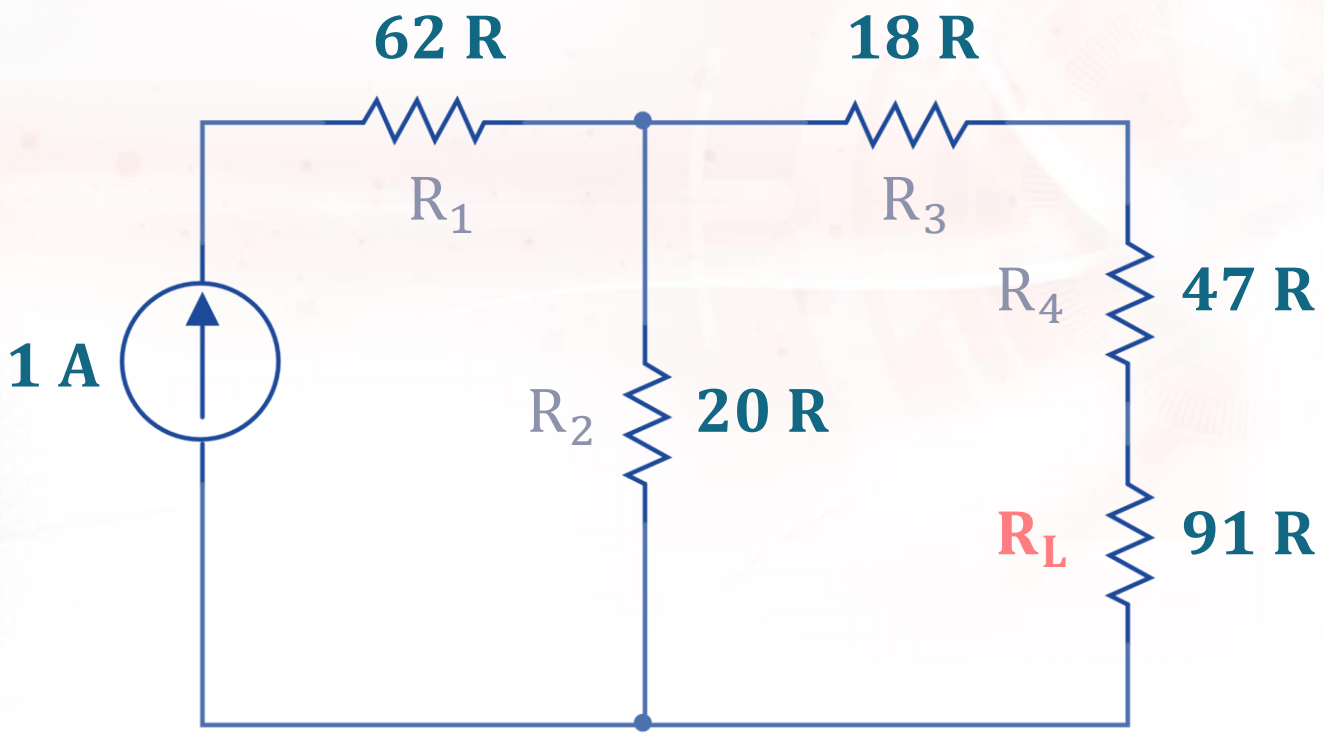

Determine the **current**, **power**, and **voltage** across the **load resistor**, R_L using **Norton's** method.

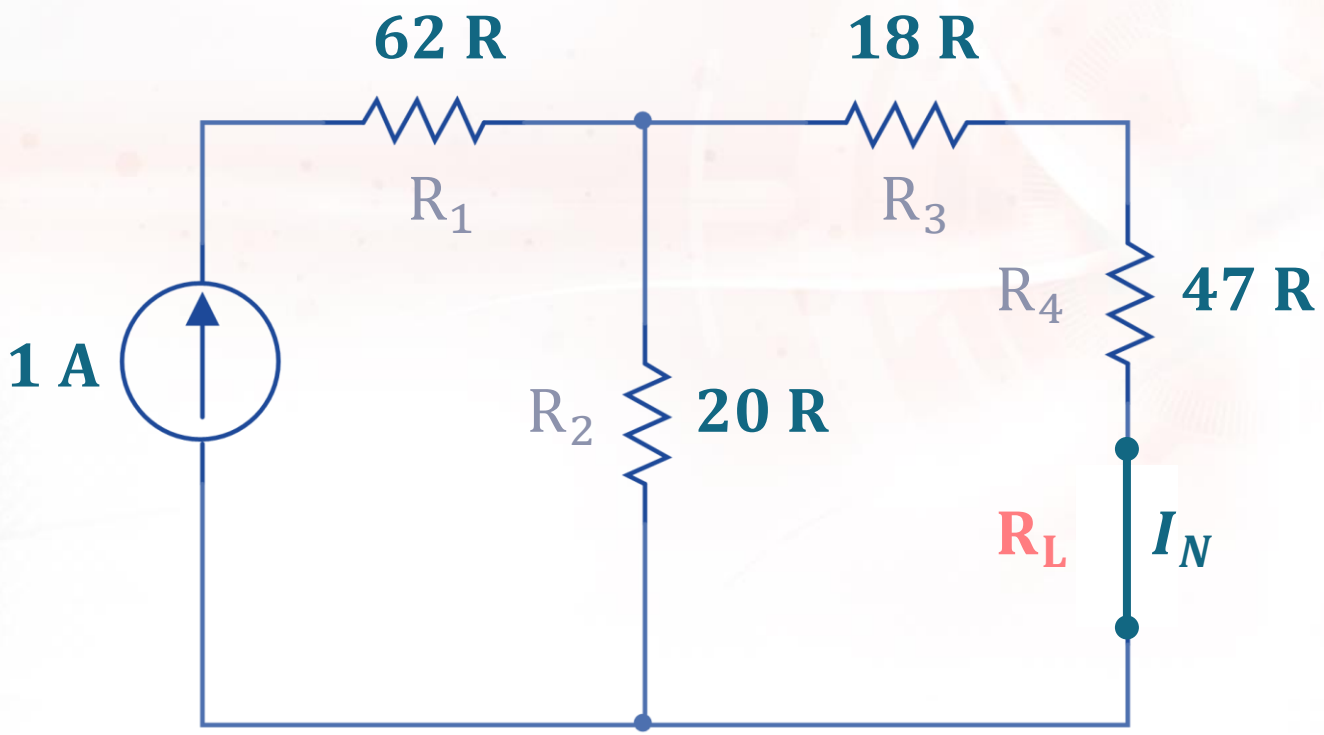

Determine the **current**, **power**, and **voltage** across the **load resistor**, R_L using **Norton's** method.

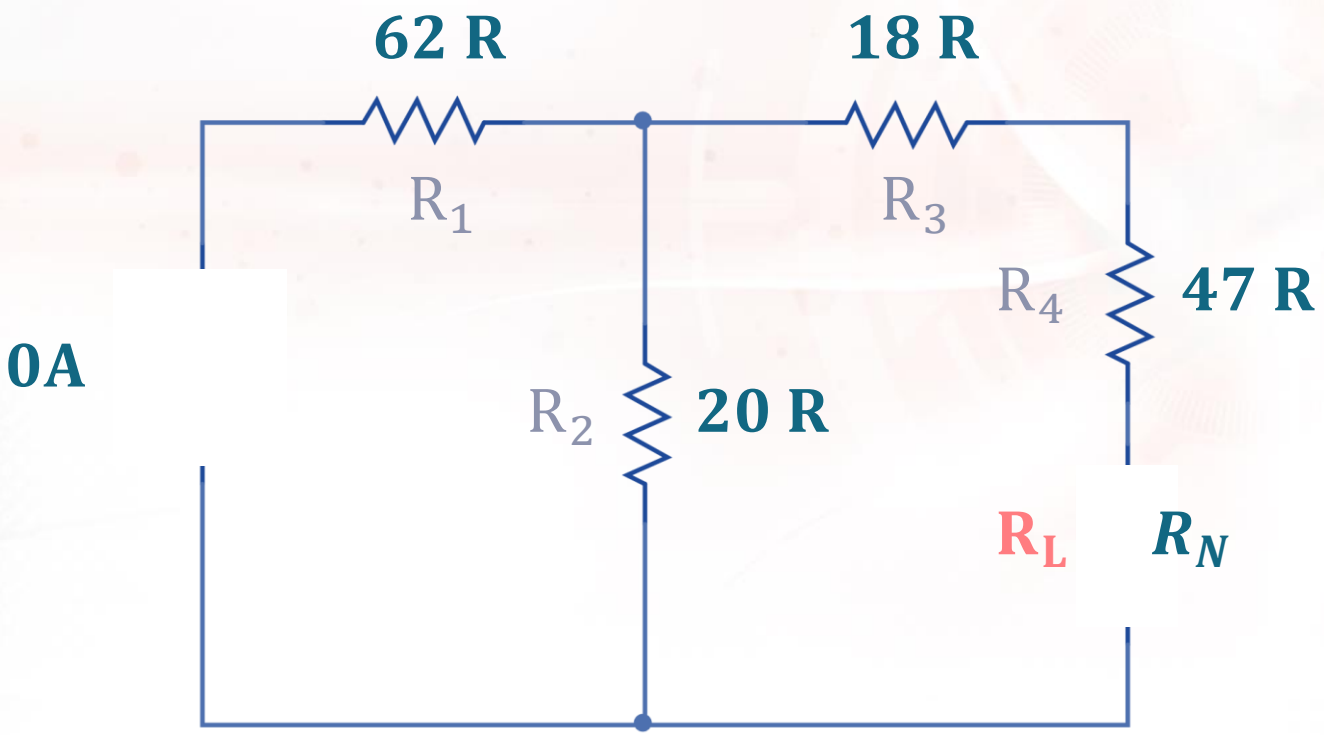

LABORATORY